Tire Pressure Warning Light Circuit

DESCRIPTION

When the tire pressure decreases, the skid control ECU illuminates the tire pressure warning light on the combination meter assembly.
HINT:
Refer to the "TIRE PRESSURE WARNING LIGHT CHART" section in the "DIAGNOSIS SYSTEM" for the tire pressure warning light (See page TW-15).

WIRING DIAGRAM

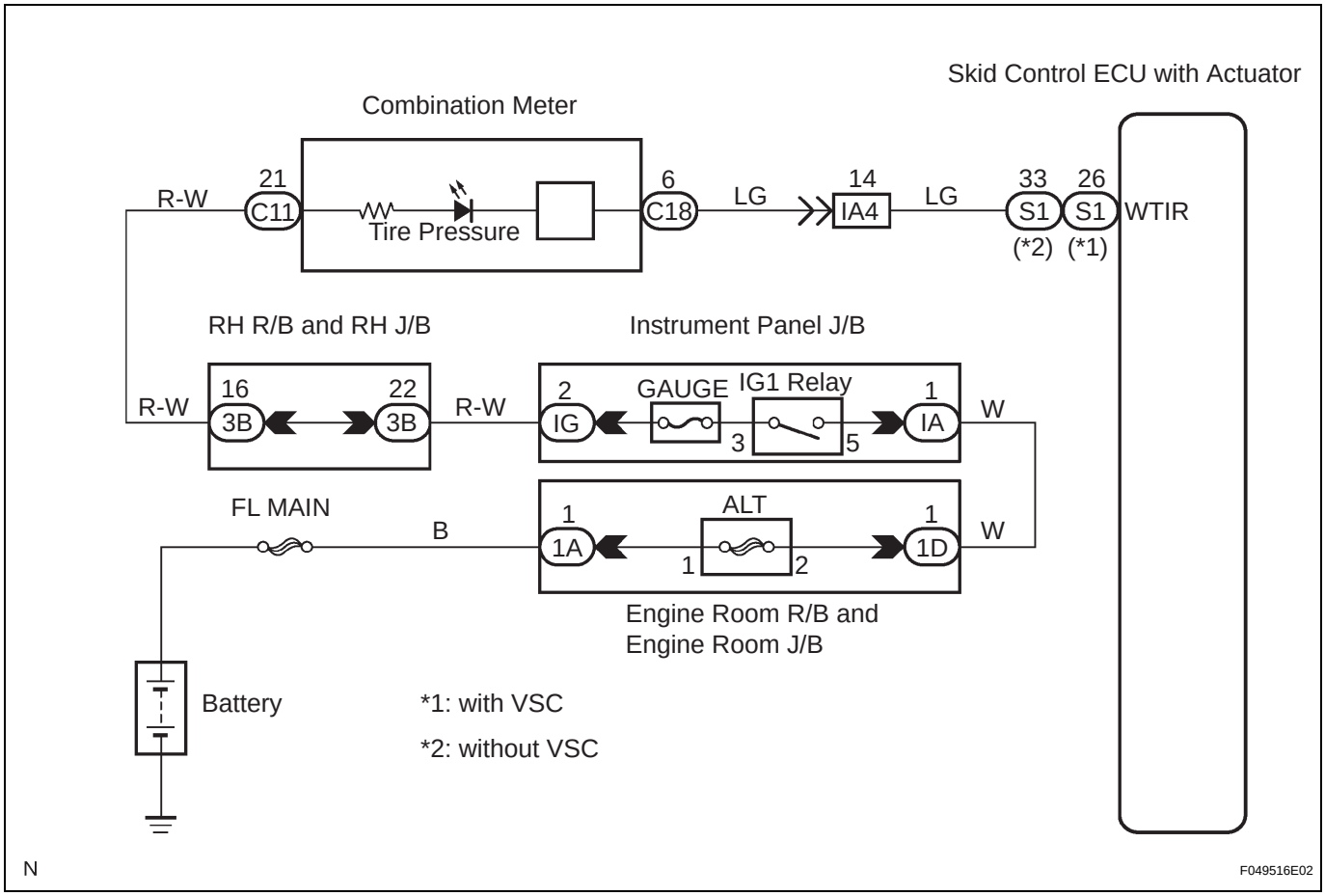

cardiagn.com

INSPECTION PROCEDURE

1	INSPECT COMBINATION METER ASSEMBLY (TIRE PRESSURE WARNING LIGHT)

Combination Meter Assembly:

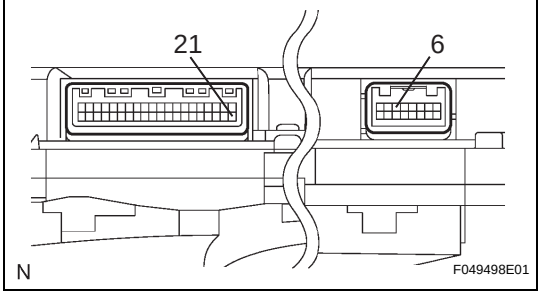

(a) Remove the combination meter assembly.
(b) Disconnect the combination meter assembly C11 and C18 connectors.

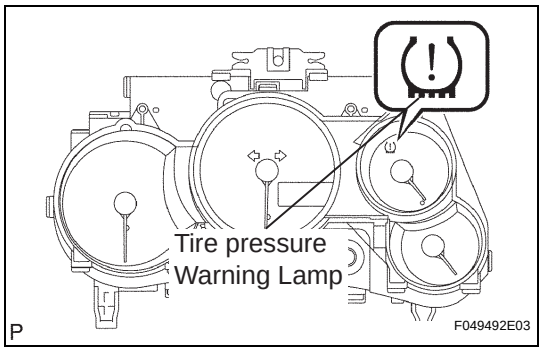

(c) Check the warning light on the combination meter assembly.
   (1) Check that the tire pressure warning light in the combination meter assembly comes on when battery voltage is applied to the terminals as shown in the chart below.

Warning light	Battery Positive	Battery Negative
Tire pressure	C11-21	C18-6

OK:
Tire pressure warning light comes on.

NG → **REPLACE COMBINATION METER ASSEMBLY**

OK

cardiagn.com

2	CHECK HARNESS AND CONNECTOR (BRAKE ACTUATOR ASSEMBLY - COMBINATION METER ASSEMBLY)

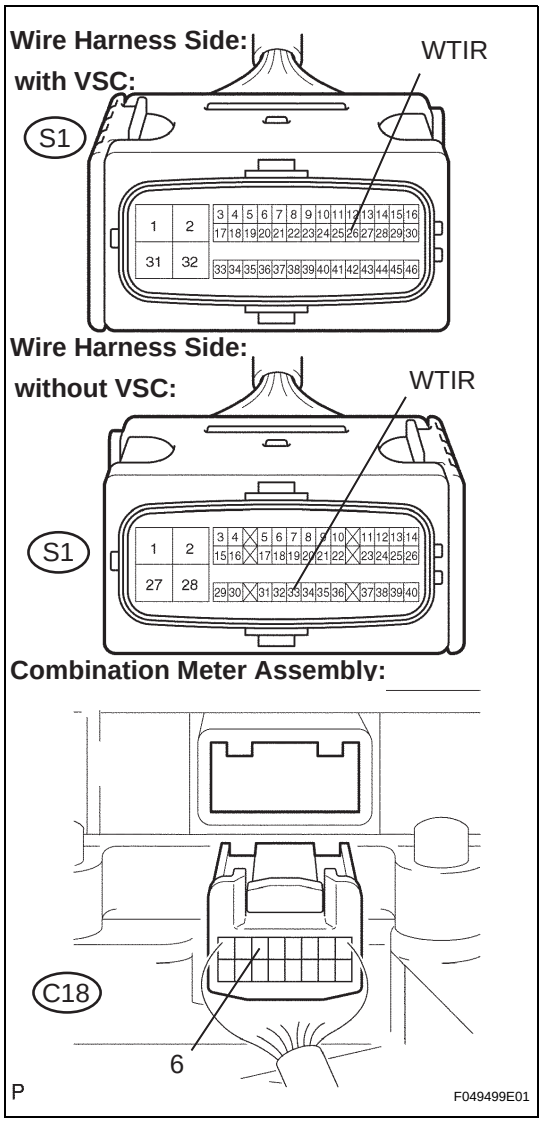

(a) Disconnect the brake actuator assembly S1 connector.
(b) Measure the resistance according to the value(s) in the table below.

Resistance (with VSC)

Tester Connection	Specified Condition
S1-26 (WTIR) - C18-6	Below 1 Ω
S1-26 (WTIR) - Body ground	10 kΩ or higher

Resistance (without VSC)

Tester Connection	Specified Condition
S1-33 (WTIR) - C18-6	Below 1 Ω
S1-33 (WTIR) - Body ground	10 kΩ or higher

NG → **REPAIR OR REPLACE HARNESS OR CONNECTOR**

OK

PROCEED TO NEXT CIRCUIT INSPECTION SHOWN IN PROBLEM SYMPTOMS TABLE

cardiagn.com